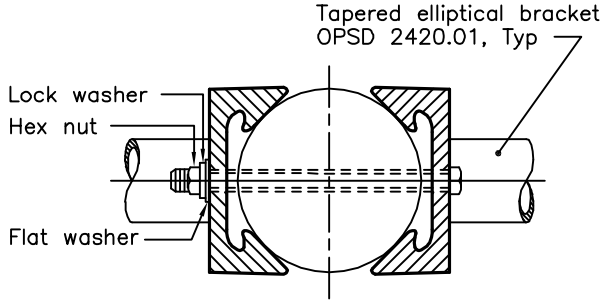

SECTION A–A

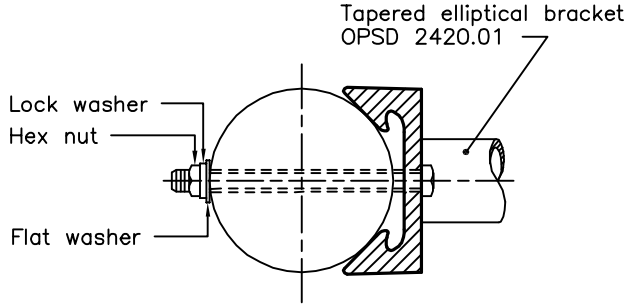

SECTION B–B

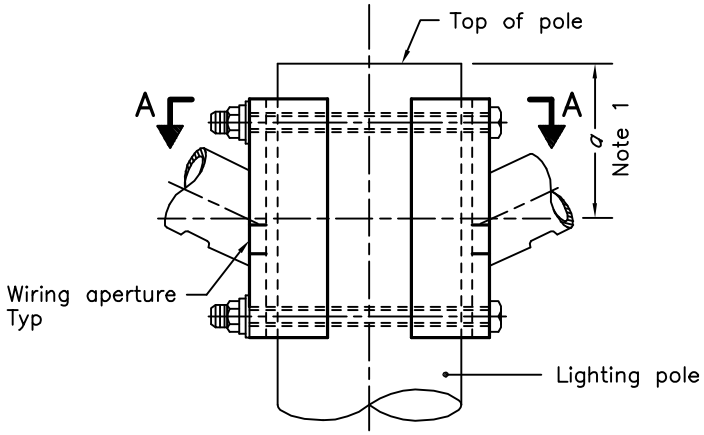

DOUBLE BRACKET

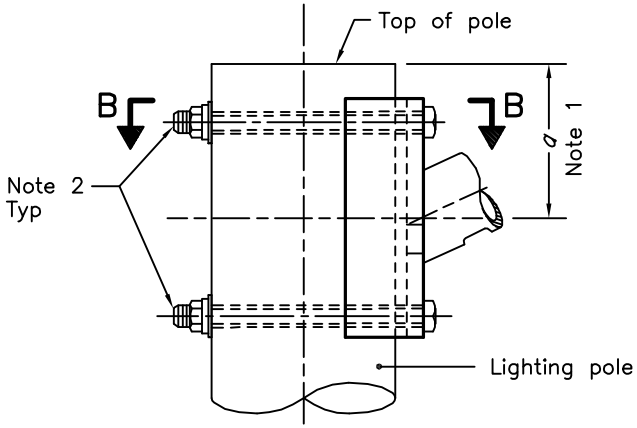

SINGLE BRACKET

NOTES:

1 For sectional steel poles, dimension a=300mm.
For all other metal poles and concrete poles, dimension a=230mm.

2 16mm diameter galvanized steel square head bolt. Bolt length to suit pole.

ONTARIO PROVINCIAL STANDARD DRAWING	Nov 2016	Rev	0
ALUMINUM TAPERED ELLIPTICAL BRACKETS ON METAL AND CONCRETE POLES MOUNTING DETAILS			
	OPSD 2250.010		