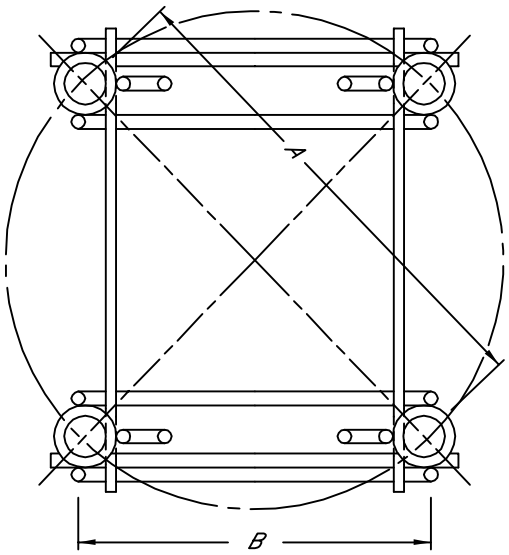

PLAN

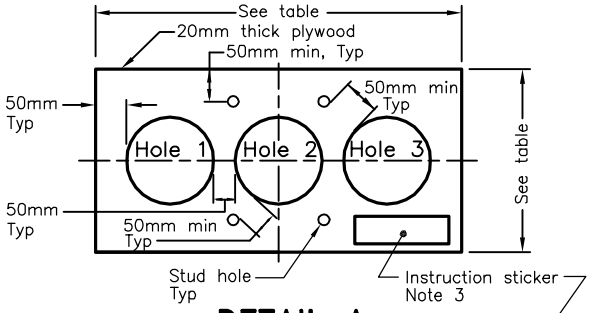

DETAIL A

INSTRUCTIONS:

1 Do not remove studs from threaded ferrules.

2 Place anchorage in footing with wood template over formwork.

3 Tie anchorage to steel in footing.

4 Tie ducts to anchorage.

5 Level anchorage in all directions with a carpenter's level and secure in the level position prior to pouring concrete to the top of the formwork.

6 When concrete has achieved initial set remove nuts, washers, and wood template and finish top of concrete.

7 Replace nuts and washers and hand tighten.

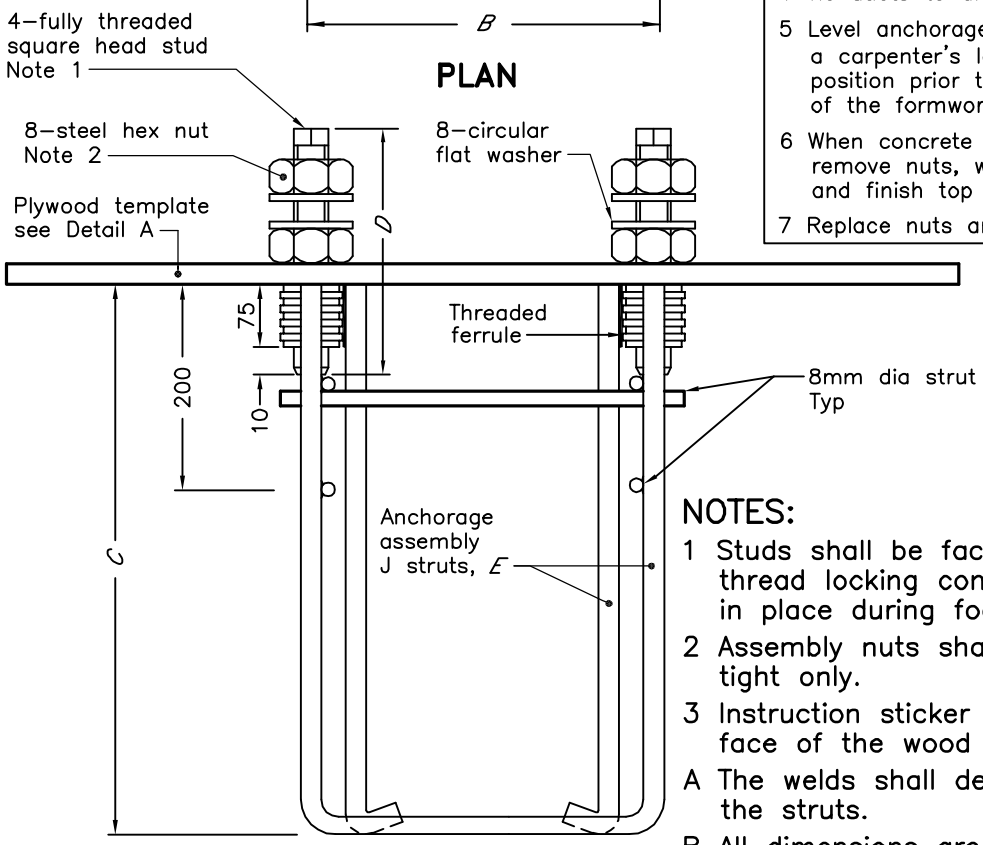

ELEVATION

NOTES:

1 Studs shall be factory set with preapplied thread locking compound and shall remain in place during footing and pole installation.

2 Assembly nuts shall be shipped hand tight only.

3 Instruction sticker shall be attached on top face of the wood template.

A The welds shall develop the strength of the struts.

B All dimensions are in millimetres unless otherwise shown.

POLE	ASSEMBLY DIMENSIONS						WOOD TEMPLATE DIMENSIONS			
LENGTH m	STUD DIA	BOLT CIRCLE DIA *A*	STUD DISTANCE *B*	ANCHORAGE DEPTH *C*	STUD LENGTH *D*	J STRUT DIA *E*	LENGTH	WIDTH	HOLE DIA 1 and 3	HOLE DIA 2
10.5	38mm (1–1/2")	449	318	457	285	12.7	1000	418	225	349
9.0										
7.5	32mm (1–1/4")	449	318	457	265	11	1000	418	225	349
6.0										

ONTARIO PROVINCIAL STANDARD DRAWING | Nov 2015 | Rev 0

ANCHORAGE ASSEMBLY FOR HEAVY CLASS STEEL POLE AND SECTIONAL STEEL POLE

OPSD 2215.025